Performance-based guidelines for practitioners

Foundations and SSI aspects of FEMA 356 and 440

Craig D. Comartin

Outline

- Example building
- Foundation modeling
- Inertial effects
- Kinematic effects
- Response spectrum for analysis
- Bearing capacity

Example building plan

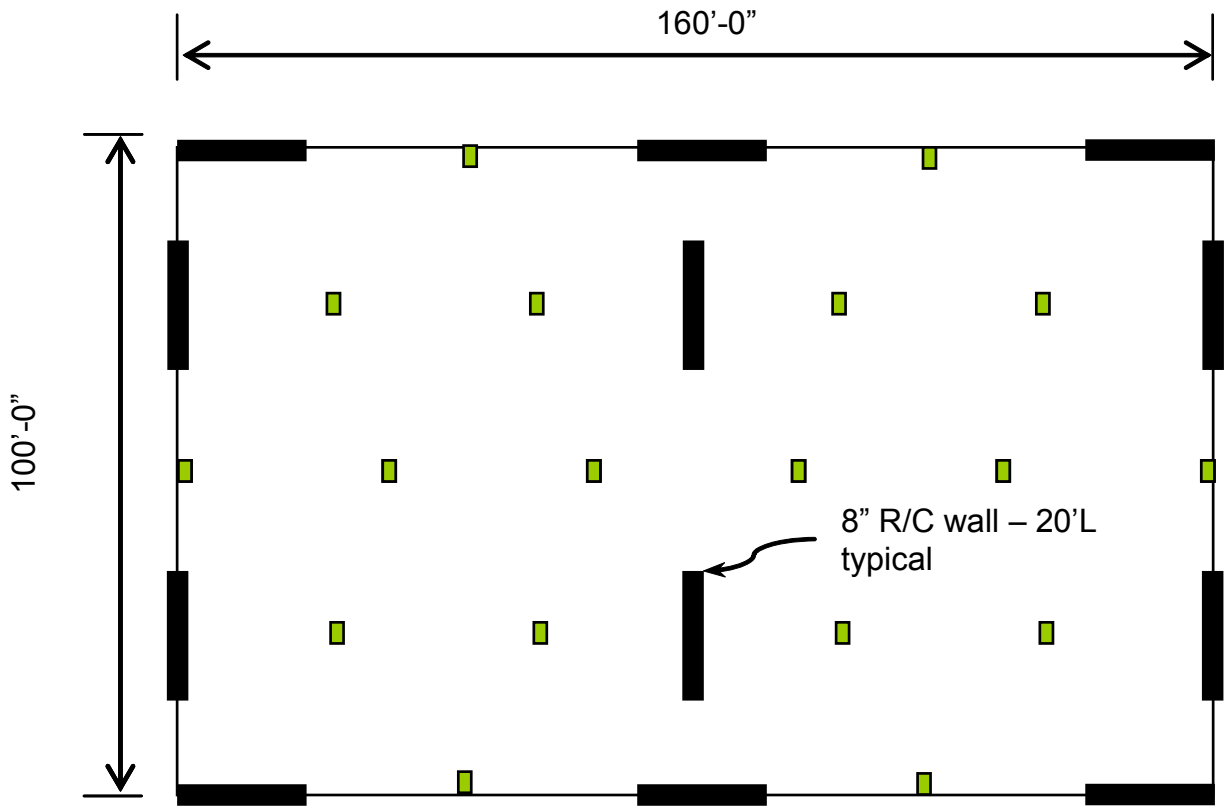

Plan

Example building wall elevation and section

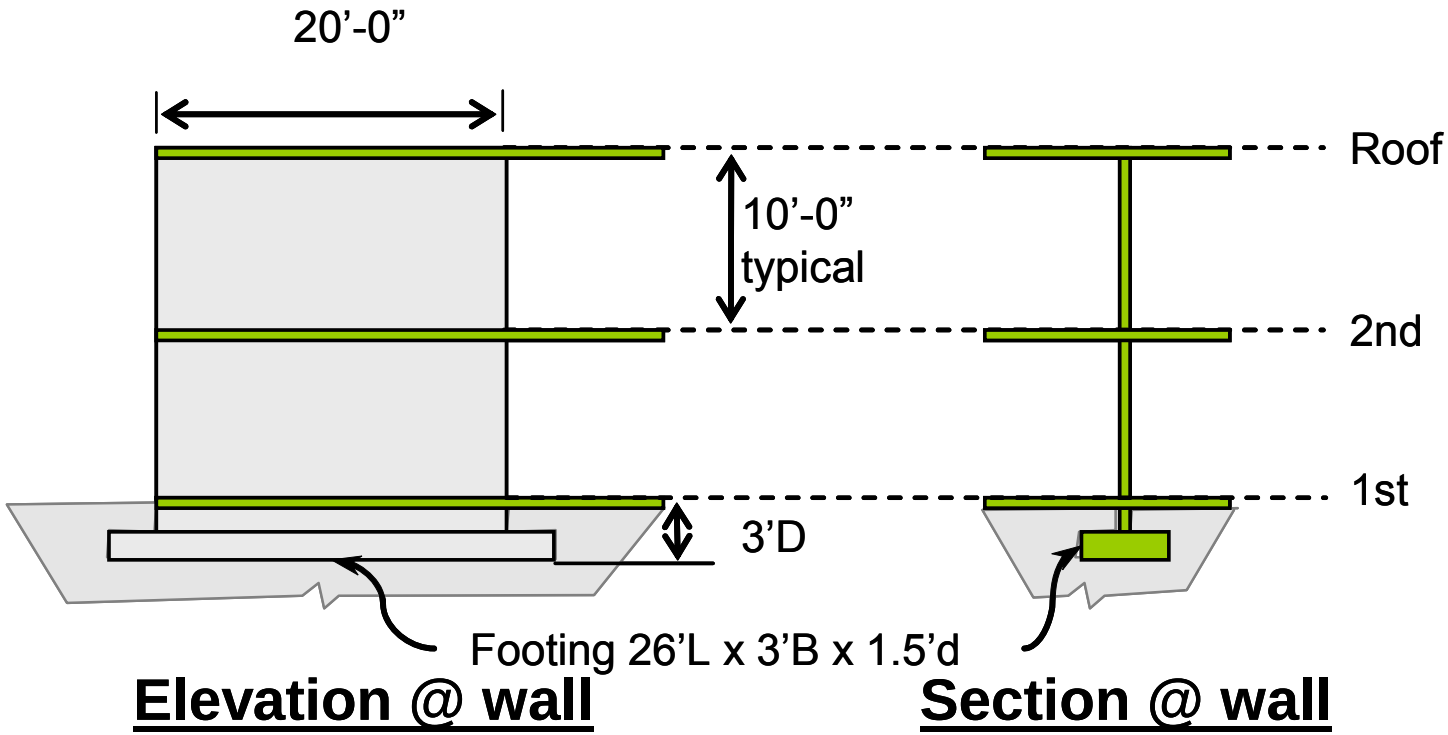

Example building description

- **Two story concrete structure:** *FEMA* model building Type C2
- **Story to story heights 10 ft:** total building height of 20 ft.
- **Plan dimensions:** 100 ft. by 160 ft.
- **Floors and roof construction:** two-way reinforced concrete flat slab
  - Roof DL = 140 psf
  - Floor DL = 160 psf
- **Vertical support:** concrete columns and interior and exterior reinforced concrete bearing walls
- **Lateral system:** six shear walls in each direction, 12 total – L=20 ft., t=8 in.
- **Foundations:** spread footings bearing 3 ft. below grade and reinforced concrete slab on grade
- **Soils conditions:** very stiff alluvium, u= 1200 fps, *NEHRP* Site Class C
- **Ground motion:** shaking with a 10% chance of being exceed in 50 yrs.
- **Analysis objective:** Maximum global displacement for specified ground motion

NOTE: See FEMA 440 for complete example.

Generic Foundation Element Models

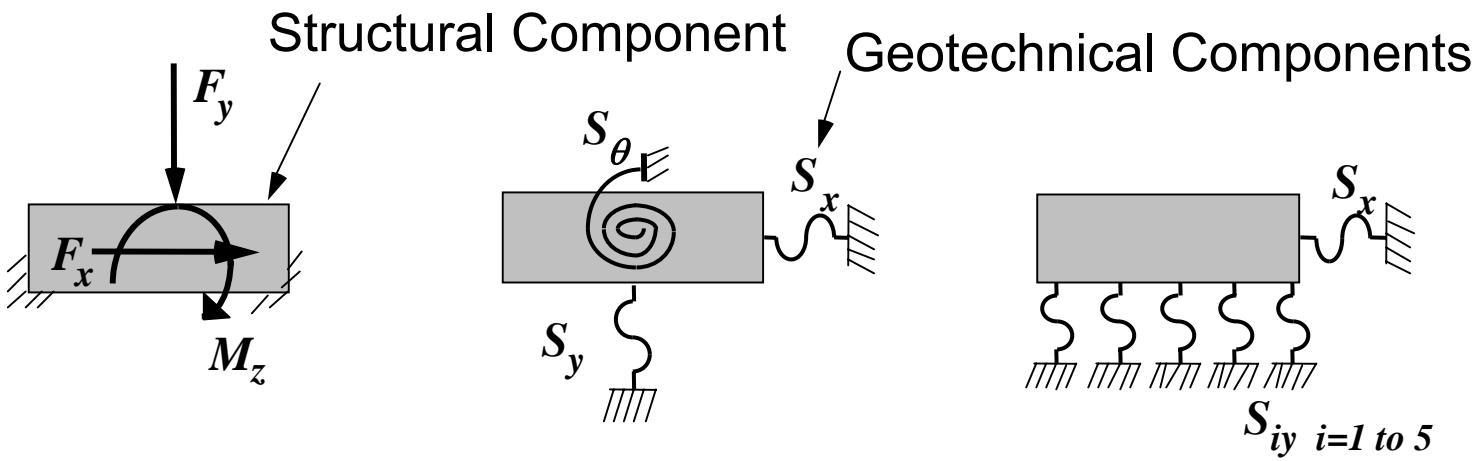

a. Foundation Actions

b. Uncoupled Component Model

c. Winkler Component Model

Flexible base properties

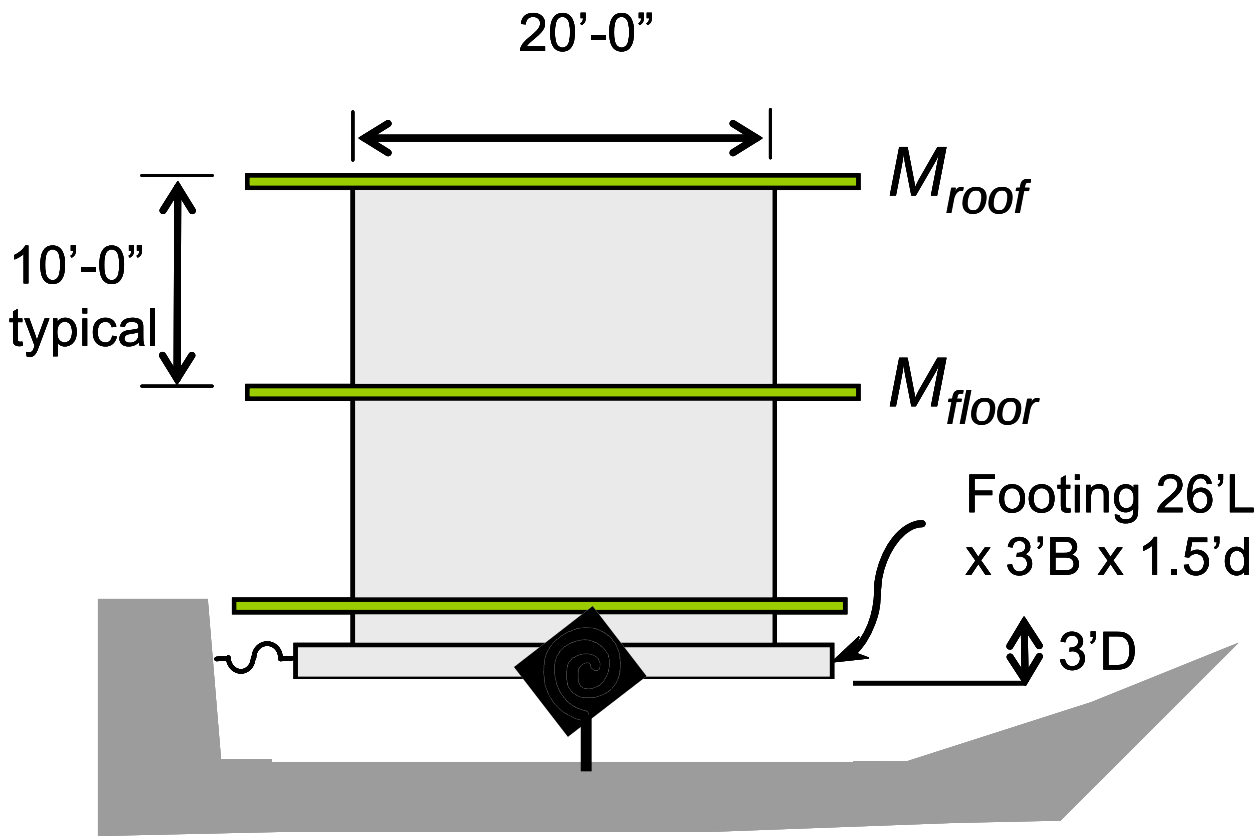

Flexible base model

Gazetas' equations (stiffness)

Degree of Freedom	Stiffness of Foundation at Surface	Note
Translation along x-axis	$K_{x,\,sur} = \frac{GB}{2-\nu}\left[3.4\left(\frac{L}{B}\right)^{0.65} + 1.2\right]$	
Translation along y-axis	$K_{y,\,sur} = \frac{GB}{2-\nu}\left[3.4\left(\frac{L}{B}\right)^{0.65} + 0.4\frac{L}{B} + 0.8\right]$	
Translation along z-axis	$K_{z,\,sur} = \frac{GB}{1-\nu}\left[1.55\left(\frac{L}{B}\right)^{0.75} + 0.8\right]$	
Rocking about x-axis	$K_{xx,\,sur} = \frac{GB^3}{1-\nu}\left[0.4\left(\frac{L}{B}\right) + 0.1\right]$	
Rocking about y-axis	$K_{yy,\,sur} = \frac{GB^3}{1-\nu}\left[0.47\left(\frac{L}{B}\right)^{2.4} + 0.034\right]$	
Torsion about z-axis	$K_{zz,\,sur} = GB^3\left[0.53\left(\frac{L}{B}\right)^{2.45} + 0.51\right]$	

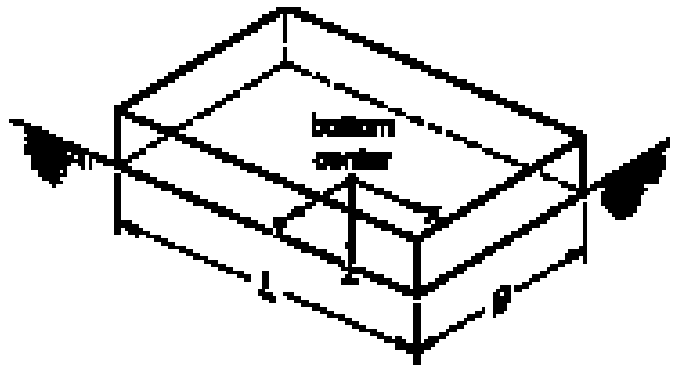

Orient axes such that $L \geq B$

Gazetas' equations (embedment)

Degree of Freedom	Correction Factor for Embedment	Note
Translation along x-axis	$\beta_x = \left(1 + 0.21\sqrt{\frac{D}{B}}\right) \cdot \left[1 + 1.6\left(\frac{hd(B+L)}{BL^2}\right)^{0.4}\right]$	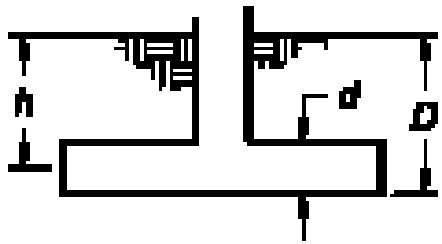 d = height of effective sidewall contact (may be less than total foundation height) h = depth to centroid of effective sidewall contact
Translation along y-axis	$\beta_y = \beta_x$	
Translation along z-axis	$\beta_z = \left[1 + \frac{1}{21}\frac{D}{B}\left(2 + 2.6\frac{B}{L}\right)\right] \cdot \left[1 + 0.32\left(\frac{d(B+L)}{BL}\right)^{2/3}\right]$	
Rocking about x-axis	$\beta_{xx} = 1 + 2.5\frac{d}{B}\left[1 + \frac{2d}{B}\left(\frac{d}{D}\right)^{-0.2}\sqrt{\frac{B}{L}}\right]$	
Rocking about y-axis	$\beta_{yy} = 1 + 1.4\left(\frac{d}{L}\right)^{0.6}\left[1.5 + 3.7\left(\frac{d}{L}\right)^{1.9}\left(\frac{d}{D}\right)^{-0.6}\right]$	For each degree of freedom, calculate $K_{emb} = \beta K_{sur}$
Torsion about z-axis	$\beta_{zz} = 1 + 2.6\left(1 + \frac{B}{L}\right)\left(\frac{d}{B}\right)^{0.9}$	

Flexible base properties

Soil properties

ATC 40
Sect. 10.4.1.2

initial shear modulus $G_0 = \frac{\gamma}{g} v_s^2 =$ 31 ksi

unit wt. of soil, $\gamma =$ 100 pcf

shear wave velocity, $v_s =$ 1200 fps

effective shear modulus $G/G_0 =$ 0.75

$G =$ 23 ksi

Poisson's ratio $\upsilon =$ 0.3

Foundation dimensions

length, L=	26	ft
width, B=	3	ft
thickness,	1.5	ft
depth, D=	3	ft

FEMA 356
Table 4.7

Soil properties

$$G_o = \frac{\gamma v_s^2}{g} \qquad (4\text{-}4)$$

soil unit weight = 100 pcf

shear wave velocity = 1200 ft/sec

gravity = 32.2 ft/sec^2

Table 4-7 *Effective Shear Modulus Ratio (G/G_0)*

	Effective Peak Acceleration, $S_{XS}/2.5$			
Site Class	$S_{XS}/2.5$ =0	$S_{XS}/2.5$ =0.1	$S_{XS}/2.5$ =0.4	$S_{XS}/2.5$ =0.8
A	1.00	1.00	1.00	1.00
B	1.00	1.00	0.95	0.90
C	1.00	0.95	0.75	0.60
D	1.00	0.90	0.50	0.10
E	1.00	0.60	0.05	*
F	*	*	*	*

G_0 = 31 ksi

$G = 0.75\ G_0$

= 23 ksi

Flexible base properties

FEMA 356
Fig. 4.4
ATC 40
Table 10.2&3

Rotational stiffness

at surface $K_{\theta,sur} = \frac{GB^3}{1-\upsilon}\left[0.47\left(\frac{L}{B}\right)^{2.4} + 0.034\right] X\ 6walls =$ **7.8 x 10^8** k-in/rad

embedment factor $\beta_\theta = 1+1.4\left(\frac{d}{L}\right)^{0.6}\left[1.5+3.7\left(\frac{d}{L}\right)^{1.9}\left(\frac{d}{D}\right)^{-0.6}\right] =$ 1.39

at depth $K_\theta = K_{\theta,sur}\beta_\theta =$ **1.1 x 10^9** k-in/rad

Flexible base properties

FEMA 356
Fig. 4.4
ATC 40
Table 10.2&3

Translational stiffness

at surface $K_{x,sur} = \frac{GB}{2-\upsilon}\left[3.4\left(\frac{L}{B}\right)^{0.65} + 1.2\right] X\ 6walls =$ 44,505 k/in

embedment factor $\beta_x = \left(1+0.21\sqrt{\frac{D}{B}}\right)\left[1+1.6\left(\frac{Dd(B+L)}{BL^2}\right)^{0.4}\right] =$ 1.86

at depth $K_x = K_{x,sur}\beta_x =$ 82,607 k/in

Linear periods

Evaluate the linear periods for the structural model assuming a fixed base, T, and a flexible base, $\tilde{T}$, using appropriate foundation modeling assumptions.

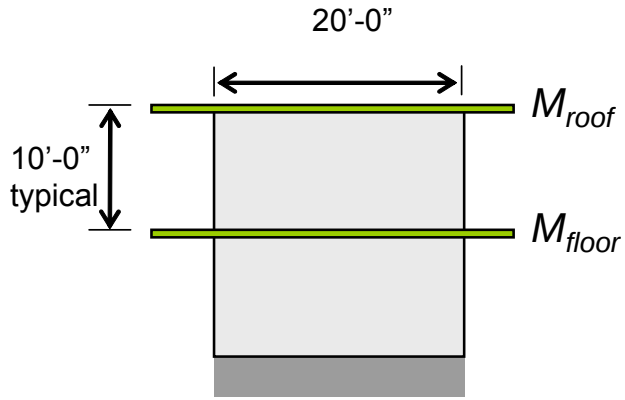

Fixed base model

$$T = 0.14\,\text{sec}$$

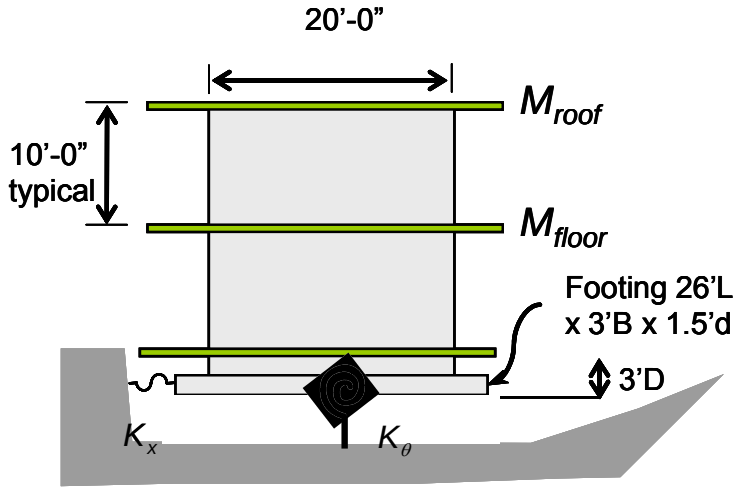

Flexible base model

$$\tilde{T} = 0.20\,\text{sec}$$

Initial spectrum for analysis

Select ground motion spectrum

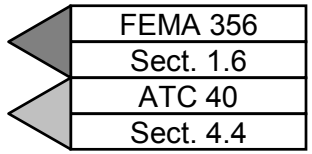

Site class C and shear wave velocity, $v_s = 1200\,\text{fps}$

Acceleration parameters for MCE shaking

short period $S_s =$ 1.5 g

long period $S_1 =$ 0.6 g

Damping coefficients for initial $\beta = 5\%$

$B_s = 1.0$

$B_1 = 1.0$

Adjustment for site class C

short period $S_{xs} = F_a S_s = (1)1.5 = 1.5g$ $F_a = 1.0$

long period $S_{x1} = F_v S_1 = (1.3)0.6 = 0.78g$ $F_v = 1.3$

To reduce to design level motions (e.g.10% chance of being exceeded in 50 years), multiply accelerations by 2/3

short period $S_{DS} = \frac{2}{3} S_{XS} =$ 1.0 g

long period $S_{D1} = \frac{2}{3} S_{X1} =$ 0.5 g

Initial design spectrum for β =5%

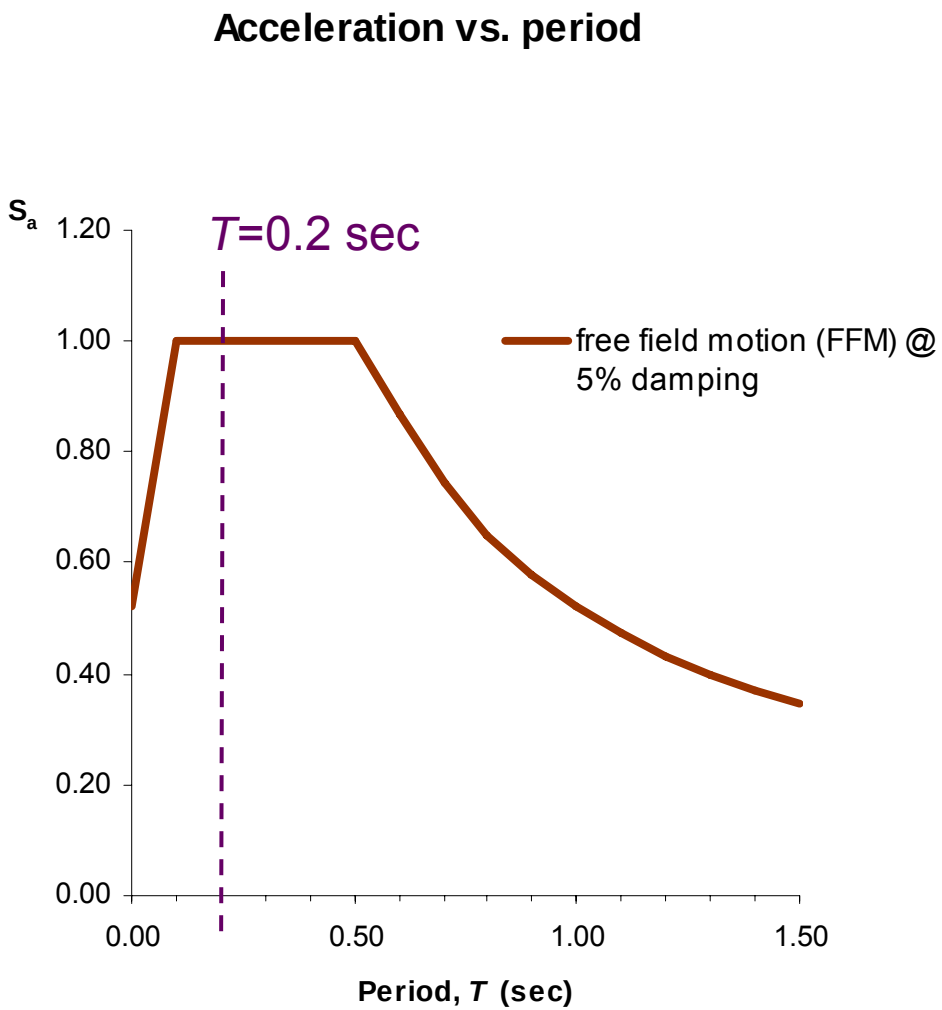

Foundation (inertial) damping

$$\beta_f = a_1\left(\frac{\tilde{T}_{eff}}{T_{eff}} - 1\right) + a_2\left(\frac{\tilde{T}_{eff}}{T_{eff}} - 1\right)^2$$

Fixed to flexible base period shift

$$a_1 = c_e \exp\left(4.7 - 1.6 h^* / r_\theta\right)$$

$$a_2 = c_e\left[25 \ln\left(h^* / r_\theta\right) - 16\right]$$

Ratio of effective height to foundation radius for rotation

$$c_e = 1.5\left(e / r_x\right) + 1$$

Ratio of effective height to foundation radius for translation

Foundation (inertial) damping Parameters necessary to compute:

$\frac{\tilde{T}_{eff}}{T_{eff}}$ **Effective period shift**

h^* **Effective building height**

r_θ **Equivalent foundation radius for rotation**

e **Embedment of structure**

r_x **Equivalent foundation radius for translation**

Effective period shift

Fixed to flexible base period shift

$$\frac{\tilde{T}_{eff}}{T_{eff}} = \left\{1 + \frac{1}{\mu}\left[\left(\frac{\tilde{T}}{T}\right)^2 - 1\right]\right\}^{0.5}$$

FEMA 440 Eqn. 8-8

μ is the expected ductility demand for the system (i.e. including structure and soil effects). This is an approximation that assumes all inelastic behavior is concentrated in the structure.

Example building

Effective period lengthening

Assume $\mu =$ 3

$$\frac{\tilde{T}_{eff}}{T_{eff}} = \left\{1 + \frac{1}{\mu}\left[\left(\frac{\tilde{T}}{T}\right)^2 - 1\right]\right\}^{0.5} = \boxed{1.2}$$

FEMA 440
Eqn. 8-8

Effective building height

$$h^* = \frac{h\sum_{i=1}^{N} M_i \varphi_i}{\sum_{i=1}^{N} M_i} =$$

174 in.

FEMA 440
Sect. 8-3

This is a simple dynamic property of the structure.

Foundation radius for rotation

$$r_\theta = \left(\frac{3(1-\upsilon) K_\theta}{8G} \right)^{\frac{1}{3}}$$

FEMA 440
Eqn. 8-7

Foundation radius for rotation

$$r_\theta = \left(\frac{3(1-\upsilon) K_\theta}{8G} \right)^{\frac{1}{3}} = 231 \text{ in.}$$

From previous calculation $K_\theta = 1.1 \text{ x } 10^9$

Alternative approximation

$$K_\theta = \frac{K^*_{fixed}\left(h^*\right)^2}{\left(\frac{\tilde{T}}{T}\right)^2 - 1 - \frac{K^*_{fixed}}{K_x}}$$

FEMA 440
Eqn.8-6

Fixed base stiffness

$$K^*_{fixed} = M^* \left(\frac{2\pi}{T} \right)^2$$

FEMA 440 Eqn. 8-3

M^* is the effective mass for the first mode calculated as the total mass times the effective mass coefficient (see *ATC 40* Eqn. 8-21).

$$K^*_{fixed} = M^* \left(\frac{2\pi}{T} \right)^2 = \alpha_m M = \quad 23{,}250 \quad \text{k/in}$$

where

$$\alpha_m = \frac{\left[\sum_{i=1}^{N} w_i \phi_{im} / g \right]^2}{\left[\sum_{i=1}^{N} w_i / g \right] \left[\sum_{i=1}^{N} w_i \phi_{im}^2 / g \right]} = \quad 0.77$$

ATC 40 Eqn 8-21

Translational stiffness of the foundation

This can be evaluated using the procedures in *FEMA 356* (Chap. 4) or *ATC 40* (Chap. 10). For many applications, it can be estimated as

$$K_x = \frac{8}{2-\upsilon} G r_x$$

FEMA 440
Eqn. 8-5

where G = effective, strain-degraded soil shear modulus and υ = soil Poisson's ratio (*~0.3 for sand, ~0.45 for clay).*

Foundation radius for translation

$$r_x = \sqrt{A_f / \pi}$$

FEMA 440
Eqn. 8-4

A_f is the area of the foundation footprint if the foundation components are inter-connected laterally.

$r_x = \sqrt{A_f / \pi} =$ 71 ft. = 856 in.

Translational stiffness of the foundation

This can be evaluated using the procedures in *FEMA 356* (Chap. 4) or *ATC 40* (Chap. 10). For many applications, it can be estimated as

$$K_x = \frac{8}{2-\upsilon} G r_x$$

FEMA 440
Eqn. 8-5

where G = effective, strain-degraded soil shear modulus and υ = soil Poisson's ratio (*~0.3 for sand, ~0.45 for clay).*

$$K_x = \frac{8}{2-\upsilon} G r_x = \quad 93{,}867 \quad \text{k/in}$$

From previous calculation $K_x = 83{,}000$

Foundation rotational stiffness

$$K_\theta = \frac{K^*_{fixed}\left(h^*\right)^2}{\left(\frac{\tilde{T}}{T}\right)^2 - 1 - \frac{K^*_{fixed}}{K_x}} = \quad 6.0\text{E+08 k-in/rad}$$

Adjust for embedment $K_\theta = 8.4 \text{ x } 10^8$

From previous calculation $K_\theta = 1.1 \text{ x } 10^9$

Foundation radius for rotation

$$r_\theta = \left(\frac{3(1-\upsilon)K_\theta}{8G} \right)^{\frac{1}{3}} = \qquad 189 \text{ in}$$

Neglecting embedment and using $K_\theta = 6.0 \text{ x } 10^8$

Foundation (inertial) damping

Determine the basement embedment, *e*, if applicable and calculate

$$\frac{e}{r_x}$$

Relative translational stiffness index

Example building

No basement so $e = 0$

Example building

Calculate foundation damping

$$\beta_f = a_1\left(\frac{\tilde{T}_{eff}}{T_{eff}} - 1\right) + a_2\left(\frac{\tilde{T}_{eff}}{T_{eff}} - 1\right)^2 = \quad 3.73 \quad \%$$

FEMA 440 Eqn. 8-9a

where

$$a_1 = c_e \exp\left(4.7 - 1.6h/r_\theta\right) = \quad 25.19$$

FEMA 440 Eqn. 8-9b

$$a_2 = c_e\left[25\ln\left(h/r_\theta\right) - 16\right] = \quad -18.06$$

FEMA 440 Eqn. 8-9c

$$c_e = 1.5\left(e/r_x\right) + 1 = \quad 1.00$$

FEMA 440 Eqn 8-9d

Foundation damping

Graphical approach

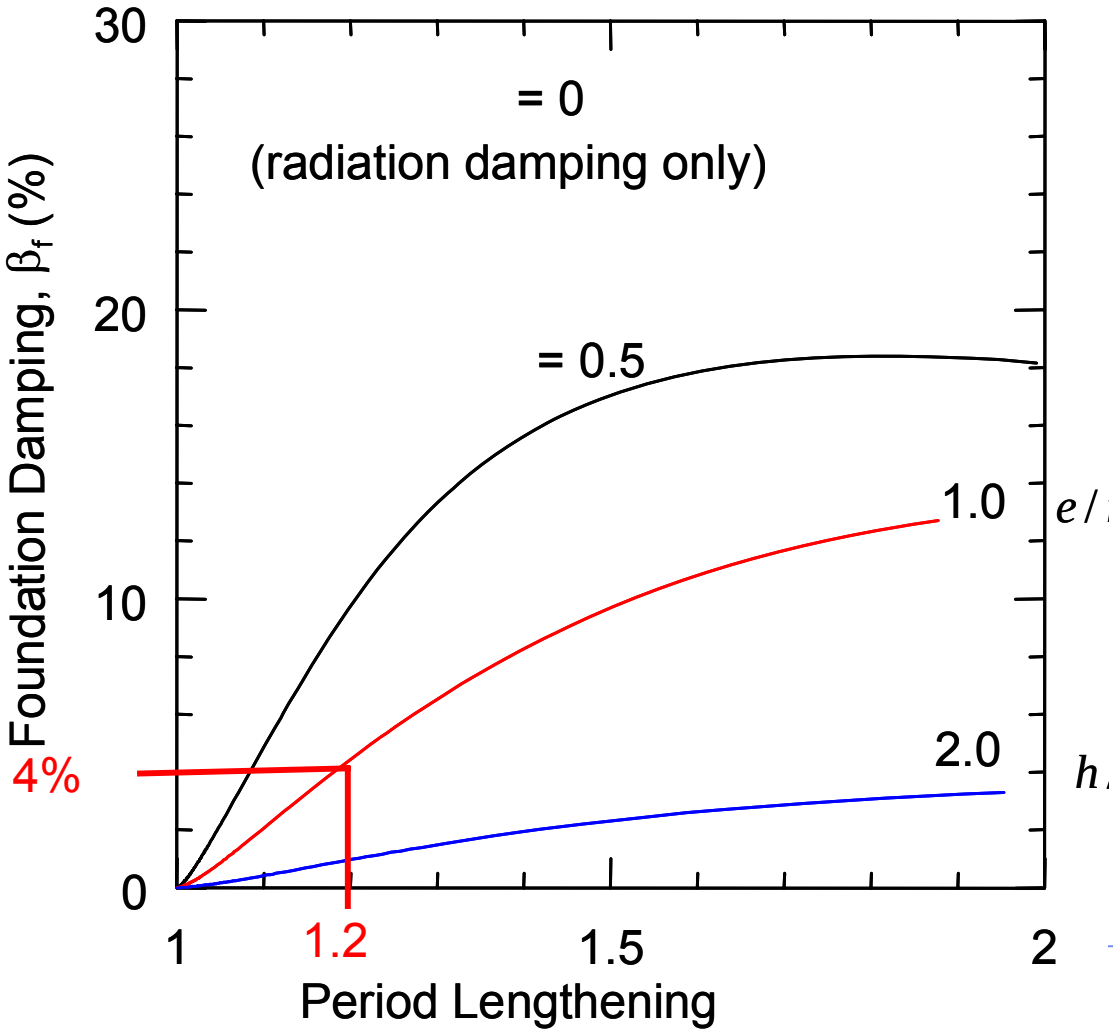

Flexible base damping ratio

$$\beta_0 = \beta_f + \frac{\beta_i}{\left(\tilde{T}_{eff}/T_{eff}\right)^3} = \quad 6.9 \ \%$$

FEMA 440
Eqn. 8-10

where $\beta_i =$ 5 %

Reduce spectrum for increased damping

Evaluate the effect on spectral ordinates of the change in damping ratio accordance with Section 6.3.

$$(S_a)_{\beta_0} = \frac{(S_a)_{5\%}}{B_{(\beta_0)}} = \frac{(S_a)_{FIM}}{B_{(\beta_0)}}$$

FEMA 440 Eqn.6-16

$$B_{\beta_0} = \frac{4}{(5.6 - \ln \beta_0 (\text{in } \%))} = 1.09$$

FEMA 440 Eqn.6-17

Spectrum adjusted for foundation damping

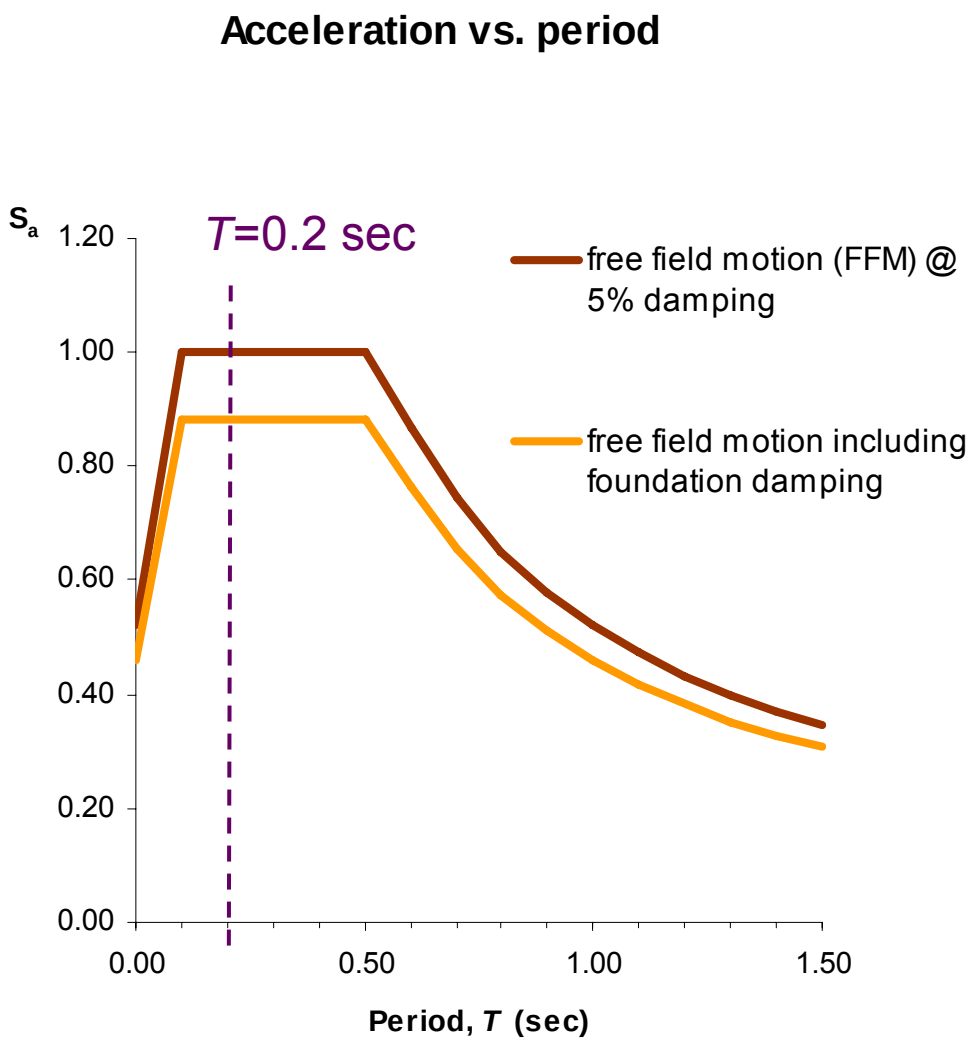

Kinematic effects

Evaluate the spectral reduction from base slab averaging (RRS_{bsa}) as a function of period.

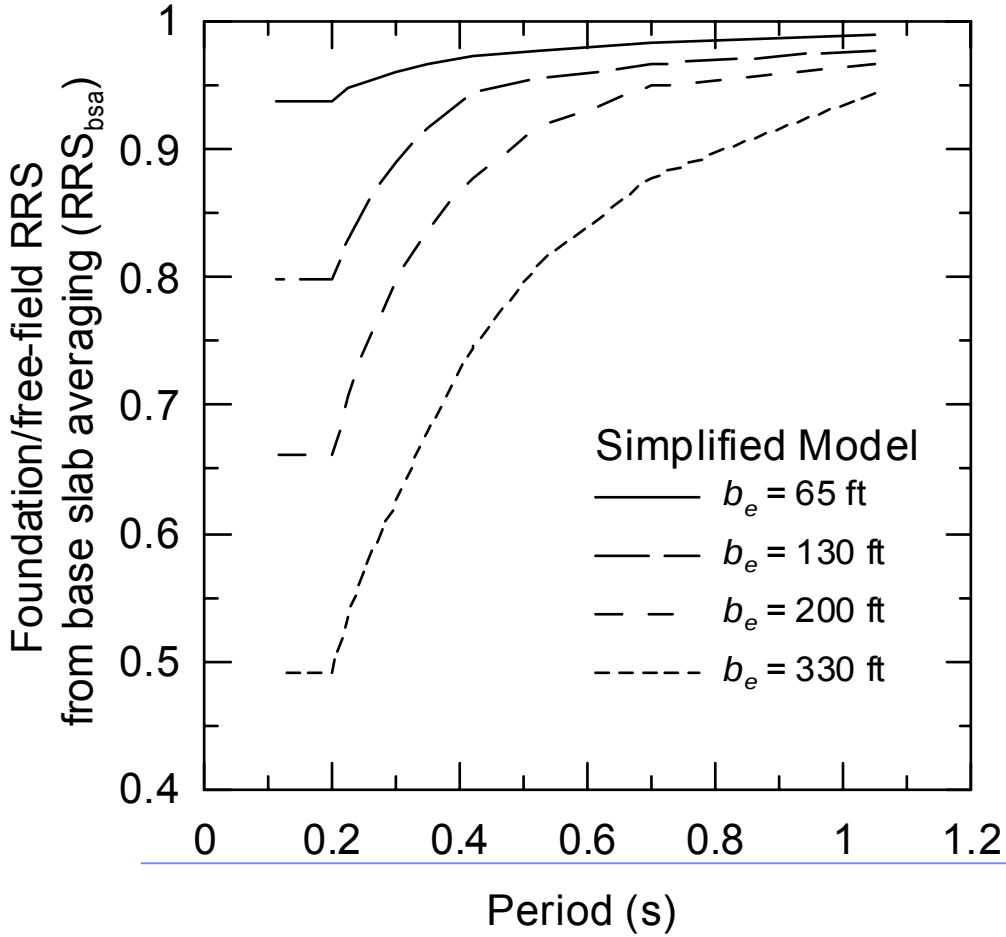

Kinematic effects

An approximation to curves is given by:

$$RRS_{bsa} = 1 - \frac{1}{14100}\left(\frac{b_e}{T}\right)^{1.2}$$

FEMA 440
Eqn. 8-1

≥ the value for T= 0.2 sec.

Kinematic effects

Evaluate effective foundation size where *a* and *b* are the full footprint dimensions (in feet) of the building foundation in plan view.

$$b_e = \sqrt{ab}$$

Kinematic effects

If the structure has a basement embedded a depth *e* from the ground surface, evaluate an additional spectral reduction from embedment (RRS_e) as a function of period.

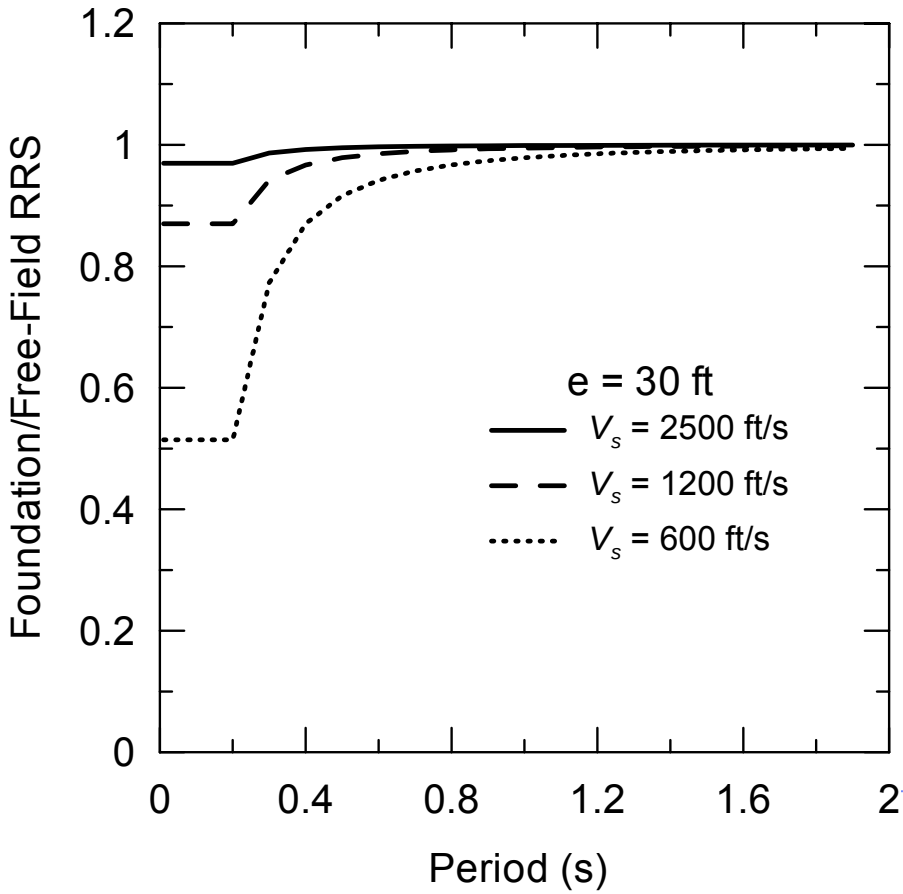

Kinematic effects

An approximation to curves is given by:

$$RRS_e = \cos\left(\frac{2\pi\, e}{T\, n v_s}\right) \geq$$

the larger of 0.453

or the RRS_e value

for T=0.2 sec.

FEMA 440
Eqn. 8-2

v_s = shear wave velocity
n = shear wave velocity reduction factor for the expected PGA

Adjust for kinematic interaction

Modify kinematic soil-structure interaction

Effective foundation size:

a = 100 ft.

b = 160 ft.

$b_e = \sqrt{ab} =$ 126 ft.

Embedment:

e = 0 no basement

$RRS_e = 1.0$

Ratio of response spectra for base slab averaging

$$RRS_{bsa} = 1 - \frac{1}{14100}\left(\frac{b_e}{T}\right)^{1.2} \geq \text{the value for } T = 0.2 \text{ sec.}$$

FEMA 440
Eqn. 8-1

Foundation input motion (FIM)

$$(S_a)_{FIM} = RRS_{bsa}\, RRS_e\, (S_a)_{FFM}$$

Final spectrum

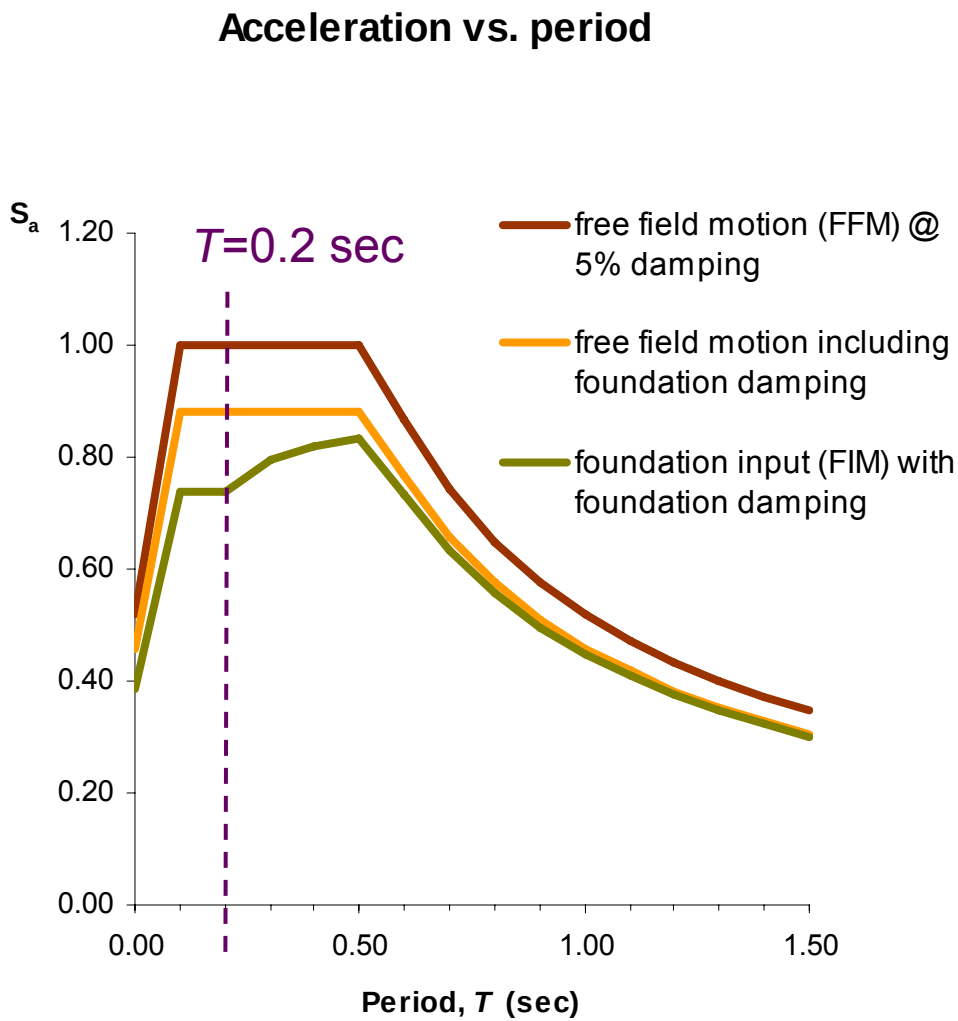

Displacement demand and base shear

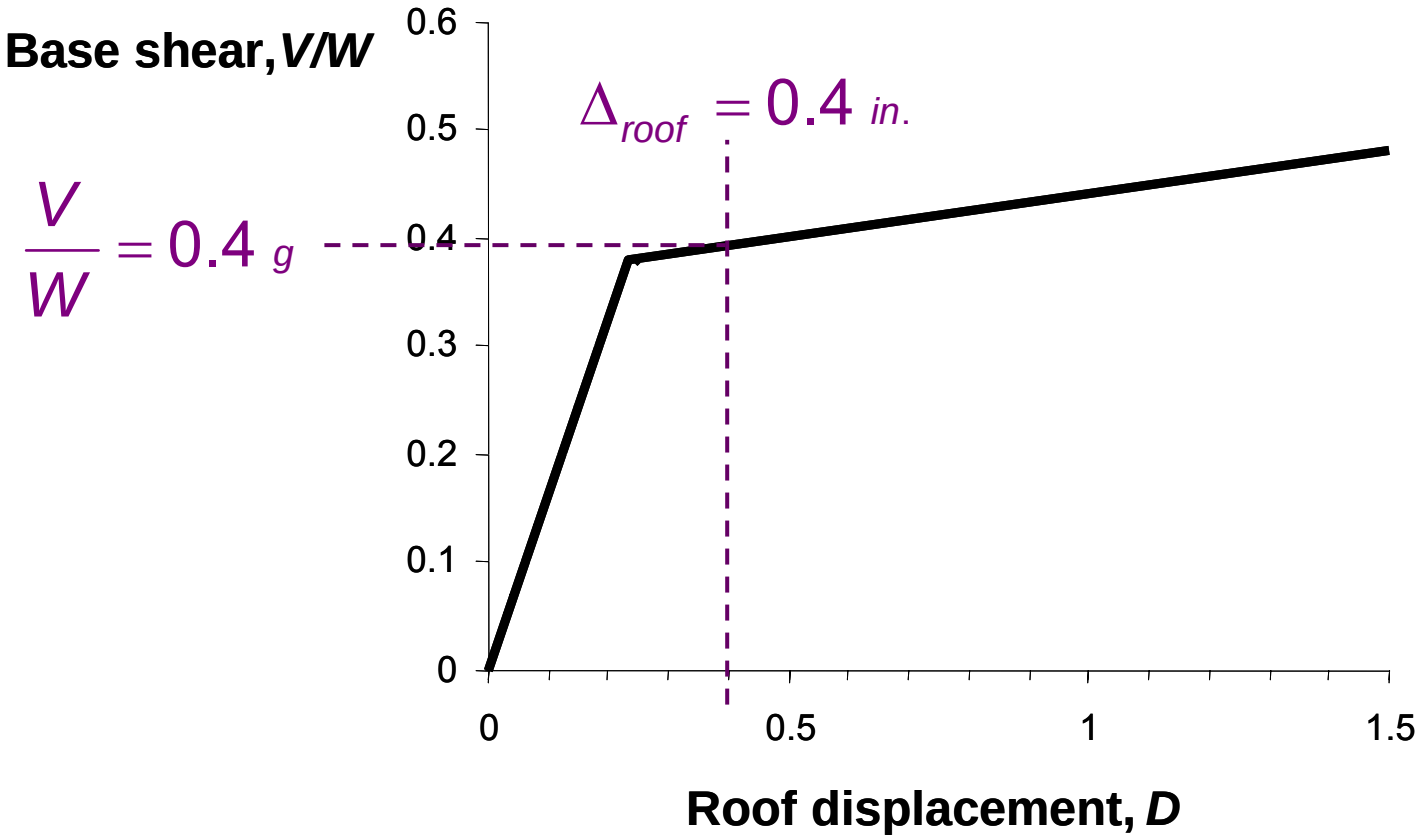

Elasto-Plastic Behavior

Possible Stress States

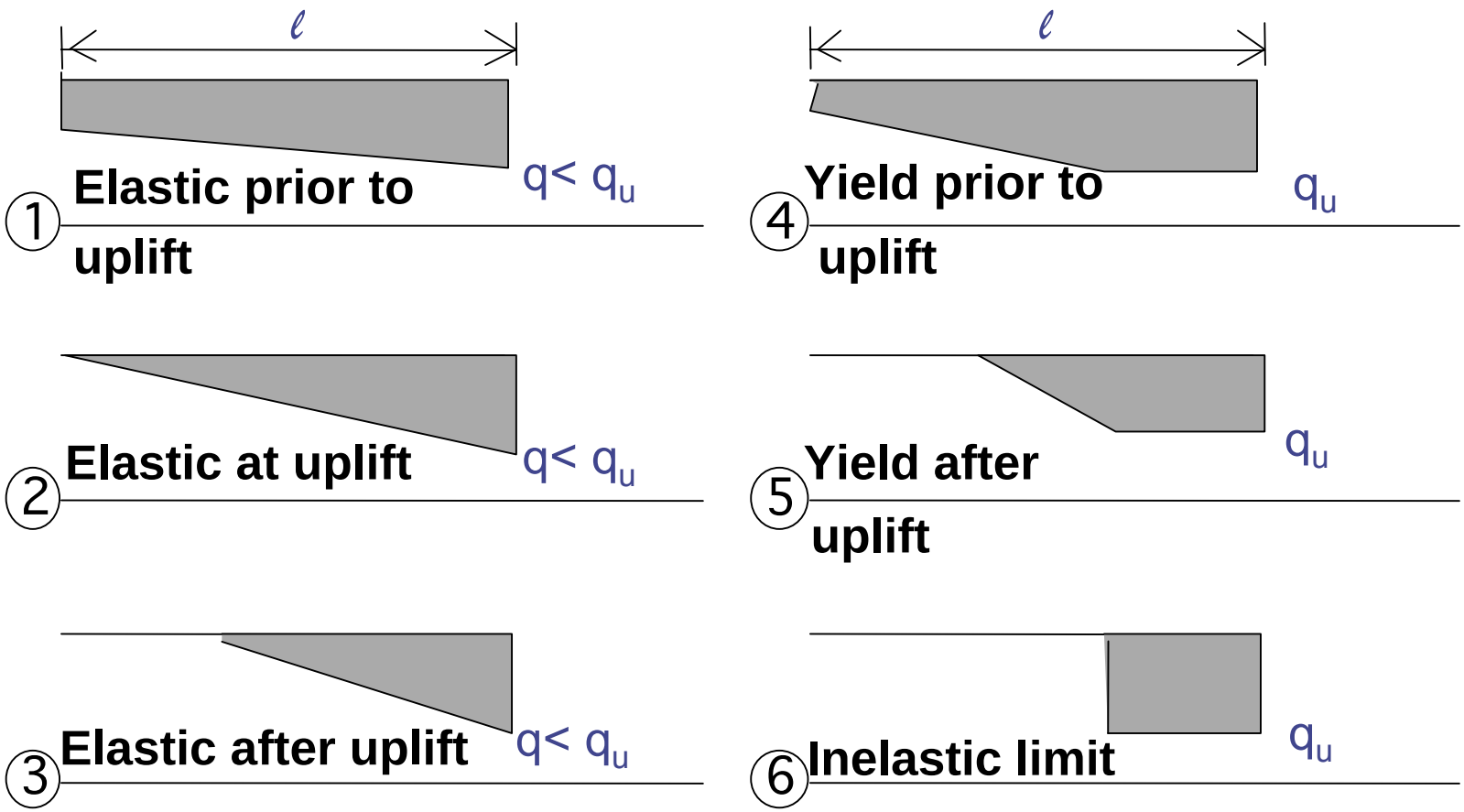

Elasto-Plastic Behavior

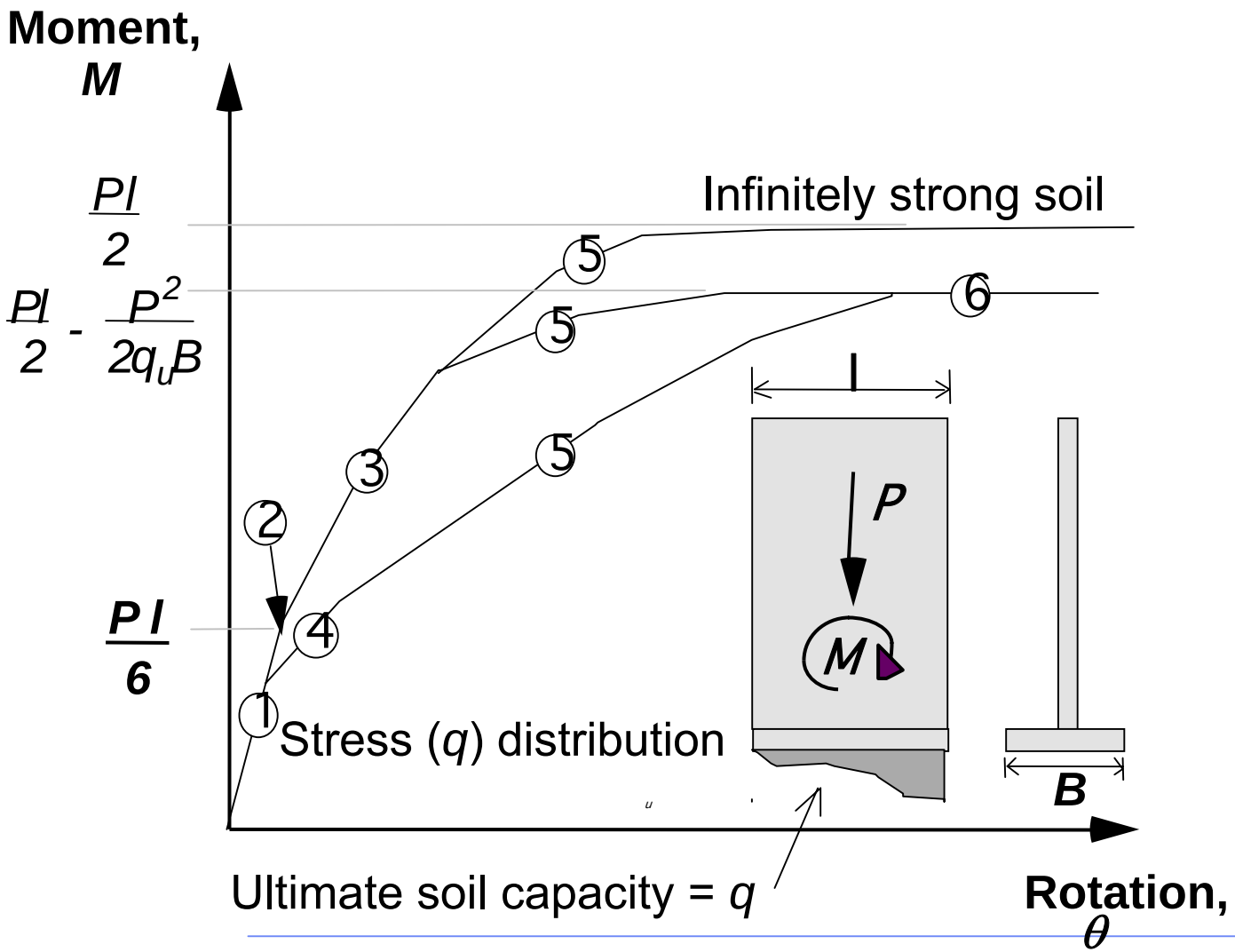

Check soil bearing capacity

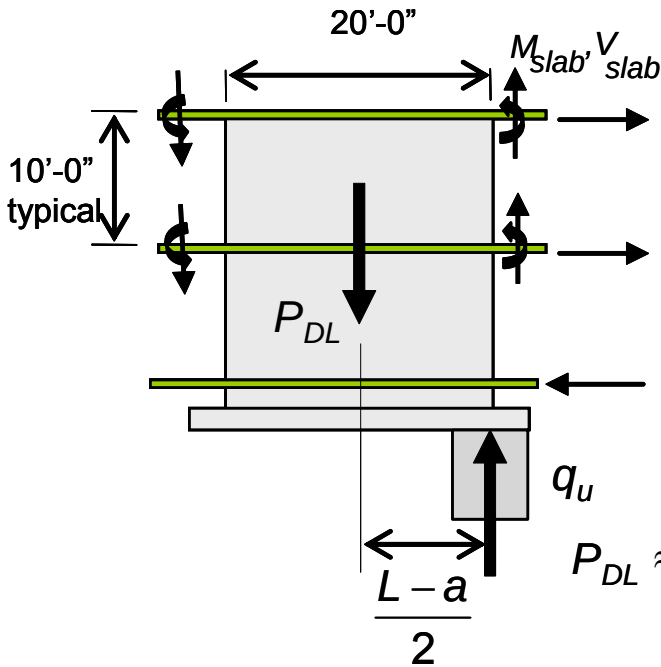

$$F_{roof} = m_{roof}\frac{V_y}{W} = 149\ ft\ k$$

$$F_{floor} = m_{floor}\frac{V_y}{W} = 171\ ft\ k$$

F_{total}

$$P_{DL} \approx 540k \qquad \sum M_{slab} + \sum V_{slab}\frac{L}{2} \approx 500\ ft\ k$$

$$M_{OTM} = F_{floor}(13) + F_{roof}(23) - 3(F_{floor} + F_{roof}) - \left(\sum M_{slab} + \sum V_{slab}\frac{L}{2}\right) = 4193\ ft\ k$$

$$M_{OTM} = P_{DL}\left(\frac{L-a}{2}\right) \rightarrow \quad a = L - 2\frac{M_{OTM}}{P_{DL}} = 10.4\ ft \qquad q_u = \frac{P_{DL}}{Ba} = 17.2\ ksf$$

Ultimate capacities for shallow foundations

Presumptive values tabulated for classes of materials

Vertical bearing pressures increase with depth and width
Lateral passive pressures increase with depth

Prescriptive values based on original design data

3.0 times specified "allowable" dead plus live loads

1.5 times all required "working loads"

Site-specific values based on geotechnical investigation

Table 4-2 *Parameters for Calculating Presumptive Expected Foundation Load Capacities of Spread Footings and Mats*

Class of Materials[2]	Vertical Foundation Pressure[3] Lbs/Sq. Ft. (q_c)	Lateral Bearing Pressure Lbs/Sq. Ft./Ft of Depth Below Natural Grade[4]	Lateral Sliding[1]	
			Coefficient[5]	Resistance[6] Lbs/Sq. Ft
Massive Crystalline Bedrock	8000	2400	0.80	—
Sedimentary and Foliated Rock	4000	800	0.70	—
Sandy Gravel and/or Gravel (GW and GP)	4000	400	0.70	—
Sand, Silty Sand, Clayey Sand, Silty Gravel, and Clayey Gravel (SW, SP, SM, SC, GM, and GC)	3000	300	0.50	—
Clay, Sandy Clay, Silty Clay, and Clayey Silt (CL, ML, MH, and CH)	2000[7]	200	—	260

1. Lateral bearing and lateral sliding resistance shall be permitted to be combined.
2. For soil classifications OL, OH, and PT (i.e., organic clays and peat), a foundation investigation shall be required.
3. All values of expected bearing capacities are for footings having a minimum width of 12 inches and a minimum depth of 12 inches into natural grade. Except where Footnote 7 applies, an increase of 20% is allowed for each additional foot of width or depth to a maximum value of three times the designated value.
4. Shall be permitted to be increased by the amount of the designated value for each additional foot of depth to a maximum of 15 times the designated value.
5. Coefficient applied to the dead load.
6. Lateral sliding resistance value to be multiplied by the contact area. In no case shall the lateral sliding resistance exceed one-half of the dead load.
7. No increase for width shall be permitted.